Butterfly Valve VM 3040G

Ductile iron • DN 40-500 • PN 10/3 • wafer type • lugs

General

- Ebro butterfly valve for air, gases, and biogas.
- Exchangeable liner.
- The liner also has the function of a flange gasket on both sides.
- Split two-piece design.
- Mounting flange.
- Designed to be mounted between flanges acc. to EN 1092 with flange surfase design acc. to en 1092 Form A/B.
- Approved for gas by DVGW EN 13344.
- Approvals by TÜV, Lloyds, Bureau Veritas, and others on request.

Options

- Different types of actuators.
- Stem extension.
- Other body coatings.
- Body in ductile iron GGG 40.3.
- DN 600.
- Shaft bearings in PTFE.
- Other flange standards.
- Valve handle in stainless steel.
- Approved for gas by DIN EN 161.

Materials

Body	ductile iron EN-JS1030 epoxy coated
Disc	stainless steel EN 1.4401
Shafts	stainless steel EN 1.4104
Seat	NBR
O-rings	NBR
Bearing bush	brass MS 58

Technical Data

DN	40	50	65	80	100	125	150	200	250	300	350	400	450	500
PN[1]	10	10	10	10	10	10	10	10	10	10	6	3	3	3
Temperature min °C	-20	-20	-20	-20	-20	-20	-20	-20	-20	-20	-20	-20	-20	-20
Temperature max °C	+60	+60	+60	+60	+60	+60	+60	+60	+60	+60	+60	+60	+60	+60
Kv-value m³/h	50	85	215	420	800	1010	2100	4000	6400	8500	11500	14500	20500	21000
Torque Nm[1]	8	9	18	24	37	59	125	140	200	280	540	420	720	900

1. For limitations according to DIN EN 161, see certificate.
2. Given at max Δp.

PN Mounting Flanges

PN 10[1]	DN 40-500

1. PN 6 and PN 16 on request.

Ventim Ventil & Instrument AB is certified according to ISO 9001 and ISO 14001

Butterfly Valve VM 3040G

Ductile iron • DN 40-500 • PN 10/3 • wafer type • lugs

Updated 2012-07-10

In the interest of technical progress, designs and dimensions may be subject to change.

Dimensions (mm) and Weight

DN	40	50	65	80	100	125	150	200	250	300	350	400	450	500
L	33	43	46	46	52	56	56	60	68	78	78 (92)	102	114	127
A	113	126	134	157	167	180	203	228	266	291	332	363	397	437
B	66	84	93	104	115	127	150	176	212	237	269	314	335	405
C	179	210	227	261	282	307	353	404	478	528	601	677	732	842
D	80	95	115	138	158	188	212	268	320	370	408	470	530	574
Di	38	48,5	63,5	78,5	98,5	123,5	148	199	248	296	338	388	430,5	494,5
F	54	54	54	65	65	65	90	90	125	125	150	150	210	210
G (square)	11	11	11	14	14	14	17	17	22	22	*	*	*	*
H1	12	12	12	16	16	16	19	19	24	24	*	*	*	*
Z	22	25	45	65	85	111	139	190	240	287	330	378	417	474
n (no of holes)	4	4	4	8	8	8	8	8	12	12	16	16	20	20
Mount. flange ISO 5211	F04	F04	F04	F05	F05	F05	F07	F07	F10	F10	F12	F12	F16	F14/F16
Weight (kg)	4,0	4,8	5,5	8,6	9,8	10,1	13,1	18,8	29,5	37,0	54,8	81,5	101,4	136,3

* According to the mounted actuator.

** Face-to-face dimention according to EN 558 Table 20 (92mm).

Face-to-face design acc. to EN 558 Series 20.

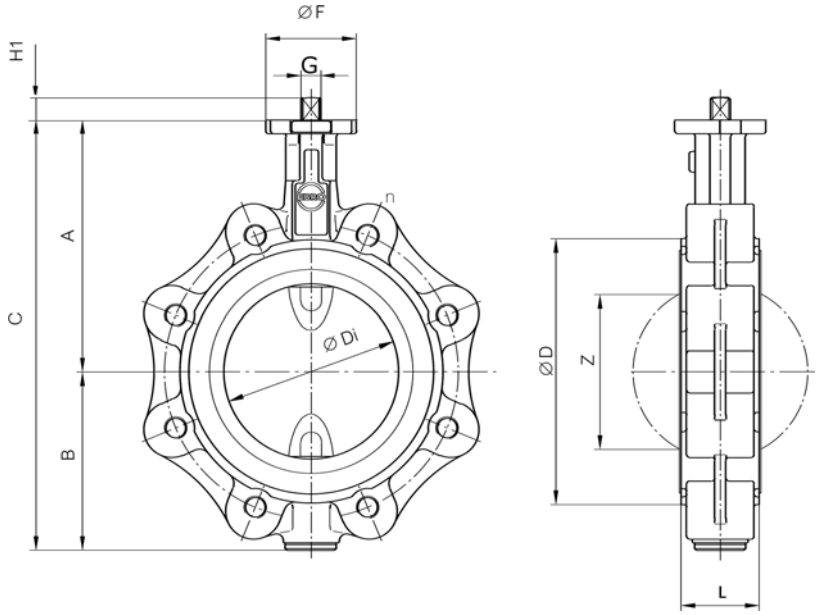

Order No

DN	Art. No
40	3040G-40
50	3040G-50
65	3040G-65
80	3040G-80
100	3040G-100
125	3040G-125
150	3040G-150
200	3040G-200
250	3040G-250
300	3040G-300
350	3040G-350
400	3040G-400
450	3040G-450
500	3040G-500

Markings

The valve is marked with DN, PN, producer, materials, and type.

Mounting

Optional, but horizontal shafts are recommended.

Maintenance

The valve is maintenance free. For best function though, regular exercise is recommended.

Ventim Ventil & Instrument AB is certified according to ISO 9001 and ISO 14001