Ball Valve VM 4300

Nickel plated brass • DN 10-50 • PN 63/40 • female thread

General

- Ball valve for liquids and gases.
- Adjustable stuffing-box.
- Full bore.
- Blow-out proof stem design.
- Face-to-face design according to DIN 3202 M3.
- Female thread according to ISO 228.
- Approved by DVGW.

Options

- DN 8.
- Extended stem.
- Oval lockable handle.
- Ball and/or stem in stainless steel EN 1.4401.
- T-handle.
- Pneumatic- or electric actuator.
- Limit switch.

Materials

Body	nickel plated brass CW617N
Ball	nickel plated brass CW617N
Stem	nickel plated brass CW617N
End cap	nickel plated brass CW617N
Seat	PTFE
O-rings	Viton
Handle	steel EN 1.0111 yellow PVC coated

Technical Data

DN	**10**	**15**	**20**	**25**	**32**	**40**	**50**
PN	63	63	40	40	40	40	40
Temperature min °C	-40	-40	-40	-40	-40	-40	-40
Temperature max °C	+170	+170	+170	+170	+170	+170	+170
Kv-value m³/h	9,3	42	64	88	120	380	410

Pressure/temperature diagram

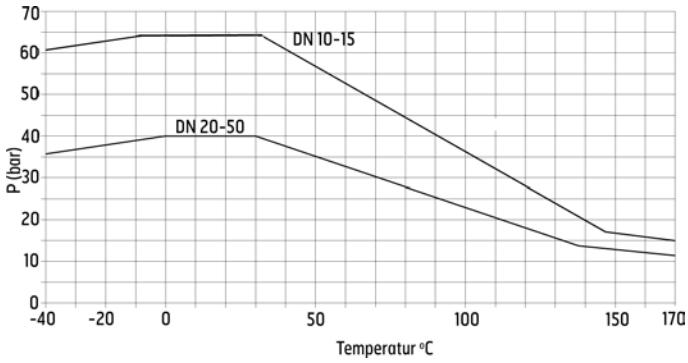

Ventim Ventil & Instrument AB is certified according to ISO 9001 and ISO 14001

Ball Valve VM 4300

Nickel plated brass • DN 10-50 • PN 63/40 • female thread

Updated 2012-03-19

In the interest of technical progress, designs and dimensions may be subject to change.

Dimensions (mm) and Weight

DN	10	15	20	25	32	40	50
L	60	75	80	90	110	120	140
D (inch)	3/8"	1/2"	3/4"	1"	1 1/4"	1 1/2"	2"
l	12,5	15,5	18	21	23	24,5	26,5
G	25,5	30,5	37	45,5	52	59	67,5
A	82	100	120	120	158	158	158
H	40	43	51,5	55,5	75	81	88,5
CH	22	27	32	41	50	55	70
Weight (kg)	0,22	0,27	0,45	0,73	1,24	1,7	3,0

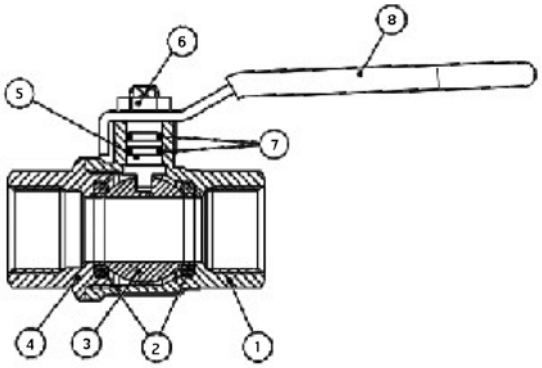

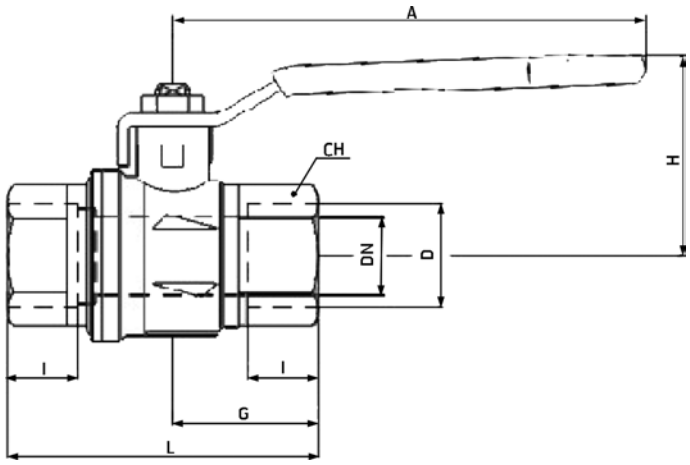

Details

1	Body
2	Seat
3	Ball
4	End cap
5	Stem
6	Nut
7	O-rings
8	Handle

Marking

The valve is marked with DN, PN, producer, and materials.

Mounting

Optional.

Maintenance

The valve is maintenance free. For best function though, regularly exercising is recommended.

Order No

DN	Art. No
10	4300-10
15	4300-15
20	4300-20
25	4300-25
32	4300-32
40	4300-40
50	4300-50

Ventim Ventil & Instrument AB is certified according to ISO 9001 and ISO 14001